0 603 238 703
Stand ~~95-06~~
Issue 08-04-14

Fig./Abb. 1

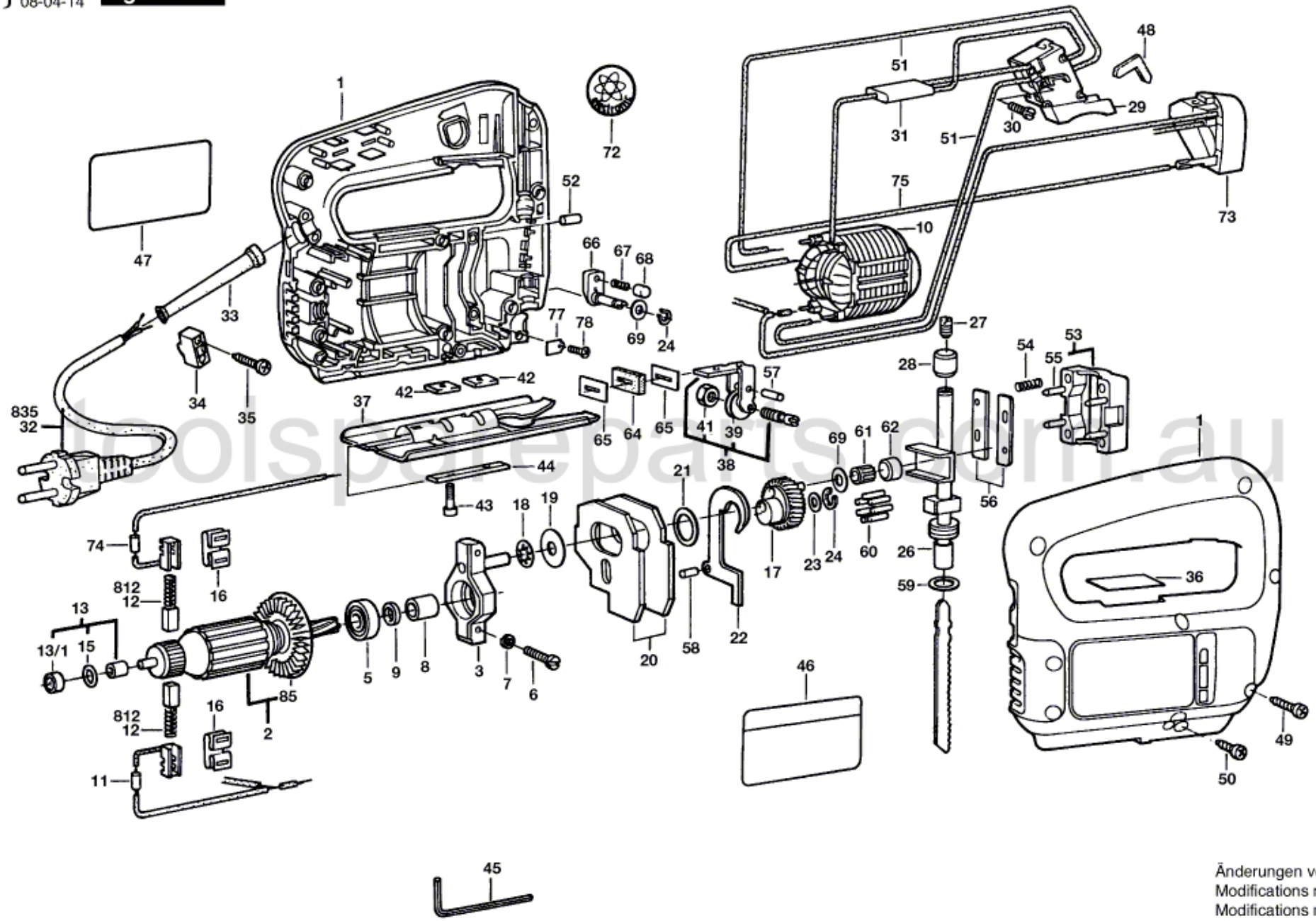

toolspareparts.com.au

Änderungen vorbehalten
Modifications reserved
Modifications reservees
Salvo modificaciones